Sophomore Design Project:
Deepwater Hydroponics System Report

Kansas State University

Mechanical Engineering Technology

Salina, KS

Prepared in Partial Fulfillment of the

Requirement for the Degree of

Associate of Technology

in

Mechanical Engineering Technology

MET 264 Machine Design Technology I

Advisor: Dr. Raju Dandu, Professor

May 7th, 2025

Ethics Statement and Signatures

The work submitted in this project is solely prepared by Christopher Leger, Matteo Shelton, Trevin LaVoie and Tyler Foster and everything within this report is original. All research and information from others' work has been clearly identified and acknowledged within the text and listed in the list of references. The engineering SolidWorks Models and design work of the prototype development and testing reported in this document are also original and prepared by the same team of students.

Christopher Leger	*Matteo Shelton*	*Trevin La Voie*	*Tyler Foster*
Christopher Leger	*Matteo Shelton*	*Trevin LaVoie*	*Tyler Foster*
Project Leader/Facilitator	*Research and Design Coordinator*	*Design Manager*	*Reporter and Timekeeper*

Table of Contents

List of Figures…….4

Project Summary…….5

Introduction…….5

Literature Survey…….7

Acknowledging Different Types of Systems…….7

Talking about DWC design……8

Additional Information to Keep in Mind……..…9

Objective…….9

Design Process……9

Plant Methodology and Design Qualification ……...9

Growing Medium……10

Aeration System……...13

Reservoir System…….16

Light System……18

Plant Design Considerations……19

Project Management…….....20

Design and Analysis……..21

Assembly Evaluation……...23

Cost and Performance Evaluation……23

Testing and Further Evaluation – Observing Plant Behavior…….....23

Conclusion……24

Reference……..25

List of Figures

Figure 1. Stacking of Hydroponics Systems (Garden & Greenhouse 2016)……..5

Figure 2. DWC Hydroponics System…….6

Figure 3. Sample of a DWC System (Eco motives)…….....8

Figure 4. Basic Need of Living Things (Eschool Today)……10

Figure 5. Rockwool (Amazon)……..…11

Figure 6. MaxiGro (Amazon)……12

Figure 7. Brown Roots are a sign of low Oxygen Levels (hutton.ac.uk)……..13

Figure 8. Smaller Bubble have High-Surface Area Increasing the Oxygen Levels……..14

Figure 9. High Temperature Reduces Oxygen Levels……..14

Figure 10. Flow Chart of the Aeration System…….15

Figure 11. Reservoir is for keeping oxygen, and nutrients inside the system (ARTISUN Technology)……..16

Figure 12. Black Tote for total reflection of light…….17

Figure 13. Automated Cleaning System (Research Gate)…….18

Figure 14. Circadian Rhythms Balances Plants Workloads……..19

Figure 15. SolidWorks DWC Design Model……22

Figure 16. Physiological Stress…….……23

Project Summary

We aim to design a simple and cost-effective hydroponics system to make it easier for people to grow plants without relying on expensive, commercial products. Where we recognize that traditional designs can be difficult to use and understand, especially for beginners, due to the technical knowledge required about plant growth and development. To address this challenge, we researched various types of Hydroponics systems with the goal of identifying the one that offered the best balance of simplicity, affordability, and effectiveness. We chose the Deep-Water Culture (DWC) for its straightforward construction that offered the best balances between assembly, maintenance, and adaptability. In addition, through testing, we found that our design provides a reliable and efficient solution for small-scale or indoor gardening, especially for those new to hydroponics.

Introduction

Hydroponics is an agricultural system developed by cultivators to grow plants without the need for soil by replacing it with water instead. Hydroponics offer advantages such as eliminating the need for plowing, weeding, and soil fertilization while also ensuring good crop harvest by allowing cultivation during



Figure 1. Stacking of Hydroponics Systems (Garden & Greenhouse 2016)

unpredictable weather conditions like droughts. In addition, it saves space whereas unlike other cultivations system, it allows stacking shown in figure 1.

The design benefits create a significant demand for a hydroponic system because of it's easier construction, operation, and maintenance comparably to that of traditional gardening, which demands rougher physical labor, land management, and seasonal considerations.

Among the various hydroponic methods, Deep Water Culture (DWC) stands out as a highly simplistic option. It's a straightforward design consisting of four main systems: the growing medium, aeration system, reservoir system, and light system. DWC is ideal for growers because it does not require any specialized tools, equipment, or electronics such as solenoid valves, irrigation timers, nutrient dosing pumps, pH/EC sensors, microcontrollers (e.g., Arduino), or plumbing fixtures. Note that DWC systems can be built with this list in mind, but for our DWC system, it only requires purchasing basic tools, such as a drill, a utility knife, and a few woodworking tools to make the product. This significantly lowers the price tag.

In truth, our primary focus for hydroponics was not on constructing a complex design, but rather on teaching new growers how to grow plants effectively, healthily, and plentifully while also being cost productive. This is what makes the DWC system so valuable, particularly because it's well-suited for settings such as classrooms, urban homes, or community gardens, where it focuses more on the educational aspects of hydroponics without overwhelming users with technical complexity such as advanced automated systems.



Figure 2. DWC Hydroponics System

At a glance of figure 2, the construction of a hydroponics design and its maintenance is straightforward, especially when compared to traditional gardening, which often requires a wide range of tools such as shovels, hoes, rakes, pruners, weeding tools, watering cans, and wheelbarrows to manage soil,

weeds, and irrigation. The real complexity of hydroponics doesn't come from assembling the system itself, but from understanding and responding to plant behavior and biology in an environment without soil.

In traditional agriculture, soil plays a crucial role in providing essential food, moisture, and livable ecosystem that supports plant health. In hydroponics, removing soil means removing all those crucial requirements for growing plants. To succeed, growers must fully understand this trade-off and recognize the design strategies used to replicate each of soil's natural roles within the system. Achieving this requires both in-depth research and ongoing refinement. Without appropriate knowledge of how to replicate the functions that the soil naturally provides, a hydroponic system becomes prone to failure, because the grower may be unable to recognize or correct key issues.

A crucial topic of hydroponics is that the system design must be made to the specific plant species being cultivated. There is no universal configuration that guarantees success across all crops. Each plant has distinct requirements for root space, oxygenation, nutrient composition, and light exposure. As such, growers must have an in-depth understanding of plant physiology and environmental response patterns to make timely adjustments. In hydroponics, success is not determined by how efficiently one can build a reservoir or mount a grow light, but rather by how effectively one can observe, interpret, and respond to plants requirements in a controlled environment.

As stated earlier, the hardest challenge of hydroponics is not the construction of the system but the conceptual challenge of growing plants without soil, a medium that has sustained them for millennia. For example, one way to conceptualize hydroponics is to think of it as working with a system that resists compromise unless you first understand its perspective and unique needs. This requires patience, awareness, and a deep understanding of plants biology. Without this understanding, one cannot make the necessary adjustments when a plant shows signs of stress, and this would inevitably lead to catastrophic failure.

This report will use the DWC as a practical solution to understanding the challenges of hydroponic cultivation, focusing on the need for biological awareness, environmental control, and adaptive system management. By addressing the often-overlooked nuances of soilless growth, it aims to provide a foundation for both understanding and improving hydroponic system performance.

Literature survey

Acknowledging different Types of Systems

We evaluated a variety of hydroponic systems that have been developed, each possessing distinct structural and operational characteristics. Among the most recognized systems are Deep Water Culture (DWC), Nutrient Film Technique (NFT), Ebb and Flow (Flood and Drain), Drip Irrigation, Aeroponics, the Wick System, Dutch Bucket systems, and Recirculating Deep-Water Culture (RWC). These systems vary in

their methods of delivering nutrients and oxygen to plant roots, ranging from passive absorption through wicks to highly oxygenated misting in aeroponics.



Figure 3. Sample of a DWC System (Provided by EcoMotive)

Talking about DWC

The DWC system, in particular, is noted for its accessibility and is frequently recommended as a suitable option for novice growers. In this system, plants are secured in mesh baskets utilizing an inert medium, such as clay pellets, with their roots submerged in a continuously oxygenated nutrient solution as seen in figure 2 above. It displays an excellent picture of how the deepwater culture system is played out and assembled. According to sources such as Instructables and Nutraponics, DWC is not only cost-effective but also simple to maintain on a compact, desktop-sized scale, making it ideal for indoor herb gardening. Herbs such as basil, sorrel, and arugula have demonstrated a high adaptability to this system and are recognized for retaining robust flavor profiles when cultivated hydroponically. To initiate plant growth from seeds, rockwool seed cubes are commonly employed. It is essential to soak these cubes in water prior to use in order to prevent damage to the seeds from the dry fibers, which possess characteristics like fiberglass. Due to health risks akin to those associated with handling fiberglass insulation, it is advisable to take precautions such as wearing a dust mask during the handling of dry rockwool.

Considerations

Considerations related to system design are also paramount. Light exposure must be carefully regulated, particularly within the reservoir, which should be designed to be opaque. Light penetration into the reservoir can prove detrimental to plant roots and can promote algae growth that competes for nutrients and can negatively affect the plants. Furthermore, it is advisable to replace the nutrient solution approximately every two weeks with smaller systems without filtration. Over time, nutrient depletion and the accumulation of toxins produced by the plants can impede growth and, in severe cases, lead to plant mortality if the solution is not refreshed. The air system should be able to have enough air supply and not overwork the pump or underperform the operation of the tank. Additionally, the idea of growing basil was presented as a very resilient plant. It would also be an excellent choice for home use as basil is used in many foods and the hydroponics in theory should make a sharper flavor. The lights should be efficient and grow lights of some kind and maybe Wi-Fi controllable.

Objective

This project aims to design, implement, and maintain a hydroponics system for growing vegetables and herbs in a home and/or urban setting. The system will demonstrate sustainable agricultural practices while optimizing resource usage and crop yield through a controlled agricultural environment.

Step 1. Simplify and create a design that is under $300
Step 2. Establish a functional hydroponics growing system
Step 3. Monitor and maintain nutrient solutions for optimal plant health
Step 4. Demonstrate the overall effectiveness

Design process

Plant Methodology and Design Qualifications

Plant Methodology refers to the process of learning and understanding how to respond to plant behavior and biological needs. This concept is essential, as it forms the foundation of our approach to hydroponic system design.

The first step to plant methodology is recognizing the fundamental similarities shared by all plants. This begins by asking a simple yet essential question: *How do plants survive, and what resources do they*

rely on for growth? The answer is not difficult to answer, as this is readily available knowledge that is already well-established: plants, like all living organisms, require five key elements to sustain life.

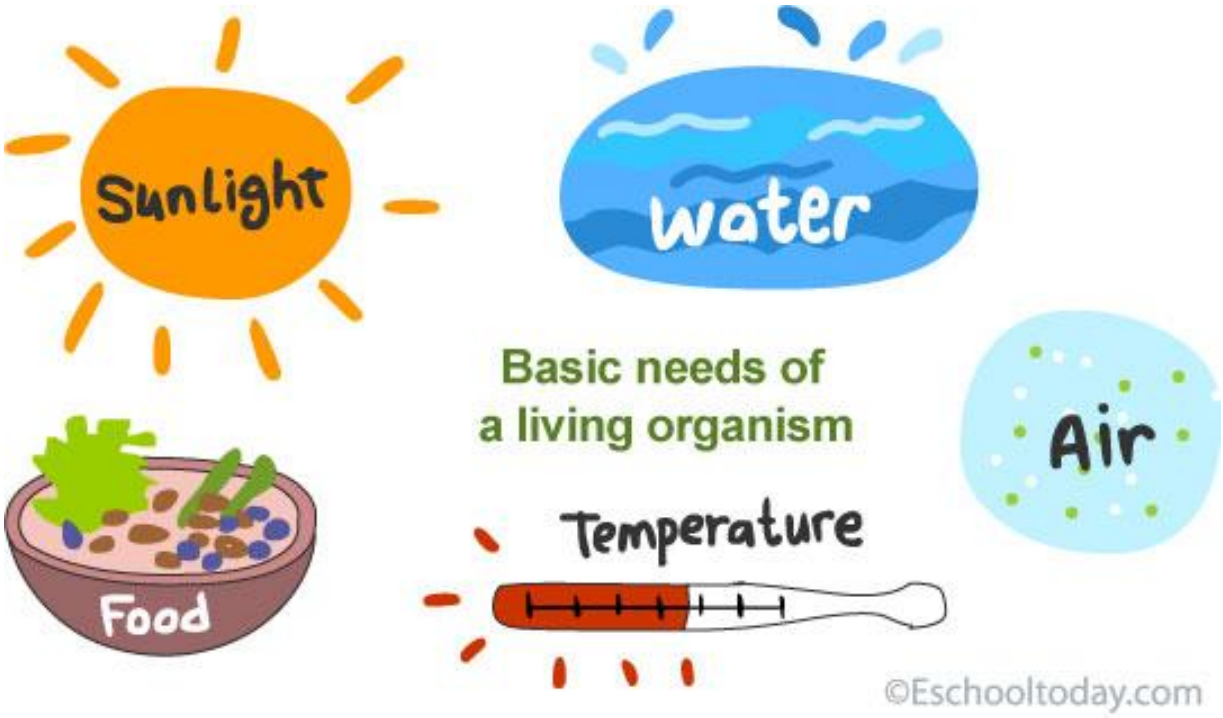

Figure 4. Basic Need of Living Things (Provided by EschoolToday)

As shown in Figure 4, for plants to survive, they need energy, water, oxygen, nutrients, and an environment stable enough to support their survival, growth, and reproduction. Like all life forms, plants rely on these elements to maintain their function, respond to environmental surroundings, and adapt to their environment. However, what distinguishes plants from other organisms is the unique way in which they acquire and utilize these resources. For example, plants obtain their own energy through light and get nutrients and oxygen from their roots. This is crucial to understand when designing a hydroponic system, as removing soil also eliminates the plant's natural access to oxygen and nutrients typically absorbed through its root system. Therefore, the system must be designed to replicate these critical functions. Cultivators addressed this challenge by developing four essential components: the growing medium, the aeration system, the reservoir system, and the light system.

Growing Medium

The growing medium serves as the frame that supports the seed during the earliest stages of development. It provides the structure that holds the seed in place while ensuring it has access to moisture and oxygen. In hydroponic systems, the growing medium thus replaces soil by creating a stable environment where roots can begin to form. Note that although it may deliver some nutrients through the surrounding solution (I will explain this later), it is not intended to serve as the plant's primary food source. Instead, it functions as a "medium" that connects the early stages of growth to the final stages of growth. At the final stage of growth is where the roots establish a good root matrix and have fully reached the reservoir's system, the main source of nutrients. The design goal of the growing medium is to ensure it maintains its physical integrity long enough to reach the final stages of growth.



Figure 5. Rockwool (Provided by Amazon)

The growing medium selected for this system was Rockwool cubes shown in figure 5, each measuring 1.5 inches. These cubes provide a great balance between water retention and airflow, which is important for developing healthy roots in a hydroponic setup.

There are three important design features that make a growing medium effective: high water retention, being inert, and having a porous structure.

1. High Water Retention: This refers to how well the medium can hold water over time. In that water are the nutrients—the food for the plant. The idea is that if you surround the seed with water and nutrients, the seed will naturally begin to grow roots in all directions to reach what it needs. Without water and nutrients around it, the seed might dry out and fail to grow. So, having a medium that holds water close to the seed is essential for root formation.

2. Inert Medium: In this system, Rockwool is used as the inert medium. It's made of fiberglass, which does not break down when in contact with water. This is important because the structure needs to stay intact until the roots grow strong enough to hold everything together. If the Rockwool falls apart before the root system fully forms or before the roots reach the main solution in the reservoir, the plant may not survive. So, the medium must stay stable during the most fragile stage of growth.
3. Porous Structure: The growing medium needs to have tiny air pockets or spaces so that oxygen can reach the roots. These gaps allow for airflow, which is critical. If oxygen doesn't reach the roots, the plant will die. This is similar to how blood vessels carry oxygen through the body. In plants, this movement of oxygen through the growing medium is called **capillary action**, where moisture and oxygen travel through the small spaces in the material to reach the seed.
    a. It's also important to be clear about the type of oxygen we're talking about. In hydroponics, plants can't use just any oxygen—they need **dissolved oxygen**, which is oxygen that's been infused into the water through the aeration system. The oxygen in the air or floating on the water surface isn't enough. So when we talk about oxygen here, we mean **dissolved oxygen**, which comes from the system's air pump and air stone.

The structure and function of Rockwool should remind of a sponge like structure. When people talk about the growing medium in hydroponics, they often mean something "sponge-like." That's because sponges can soak up water and hold onto it while still allowing air to flow through. This is exactly what we want for feeding the seed.



Figure 6. MaxiGro the food source (Provided by Amazon)

To feed the seed, we used General Hydroponics MaxiGro seen in figure 6, which is a powder that contains the nutrients plants need to grow. You can't just sprinkle the powder onto the Rockwool and expect it to work. Instead, the powder must be dissolved in water. Once mixed, the Rockwool can soak up the nutrient solution like a sponge.

Think of it like making lemonade for the seed. The MaxiGro powder is your lemonade mix. If you make the lemonade too sour, the plant won't like it. If it's too weak, the plant won't get enough nutrients to grow. That's why it's important to follow the manufacturer's dilution instructions—to get the balance just right. Once the solution is mixed correctly, you dip the Rockwool with the seed inside into the mixture. This is called saturating the growing medium. You want to saturate it enough to hold the maximum amount of water it can, but not so much that it gets soggy or drowns the seed.

This step—soaking the Rockwool with nutrients—is part of the **germination process**. If done correctly, the roots will grow out of the cube and the mesh pot, and the plant will use the sponge-like Rockwool to continue receiving oxygen and nutrients as it grows.



Figure 7. Brown Roots are a sign of low Oxygen Levels shown on the Left (Provided by hutton.ac.uk)

Aeration System

The aeration system is specifically designed to provide the right amount of oxygen, also known as Dissolved Oxygen (DO), to the plants. Keep in mind that the roots are the only part of the plant that take in oxygen in a hydroponic system. This means you don't want anything to block or cover the roots. For example, harmful substances like algae can grow and attack root tissues, damaging the only part of the plant that allows it to breathe—this is shown in Figure 7. While algae grow for many reasons, low DO levels are one of the main causes. If you start noticing brown roots, it may be a sign that your aeration system needs more oxygen.

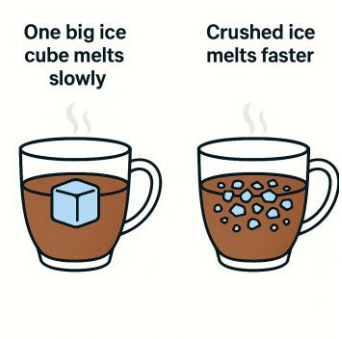

Figure 8. Smaller Bubble have High-Surface Area Increasing the Oxygen (Provided by ChatGPT)

Also remember that DO increases when finer bubbles are used. Shown in figure 8, think of the water as a hot pot of coffee, and your bubbles as ice cubes being dropped into it. Which melts faster—one large ice cube or several smaller ones? The smaller ones melt faster because they have more surface area. The same thing happens with bubbles in water—smaller bubbles dissolve faster, which helps increase the DO in the system. These dissolved bubbles create the form of oxygen that plants can absorb through their roots.

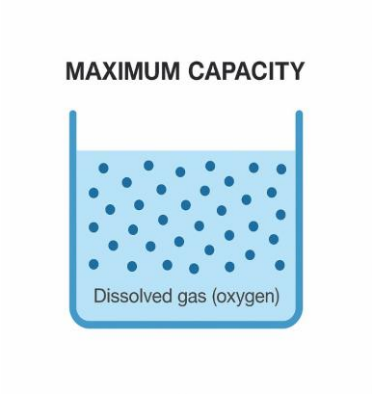

Figure 9. High Temperature Reduces Oxygen Levels (Provided by ChatGPT)

Another sign of low oxygen levels could be related to a physical property of water called supersaturation. Saturation refers to the maximum amount something can hold. For example, imagine dipping a sponge into water and lifting it out. The water that stays inside the sponge shows how much it can hold—that's the saturation point. Once a sponge is holding all the water it can, we say it's 100% saturated.

Supersaturation is when water holds more DO than it normally can, shown in figure 9, which is what we aim for in hydroponics. Ideally, you want your water to be at 100% DO saturation, which gives your plants the best chance for strong growth. However, it's important to understand that this maximum capacity isn't always the same—temperature and pressure affects it. Higher temperatures lower the amount of DO

water can hold, which can cause more problems in the system. To keep things stable, try to keep your water temperature around 70°F, which helps maintain ideal DO levels and prevents oxygen loss due to heat.

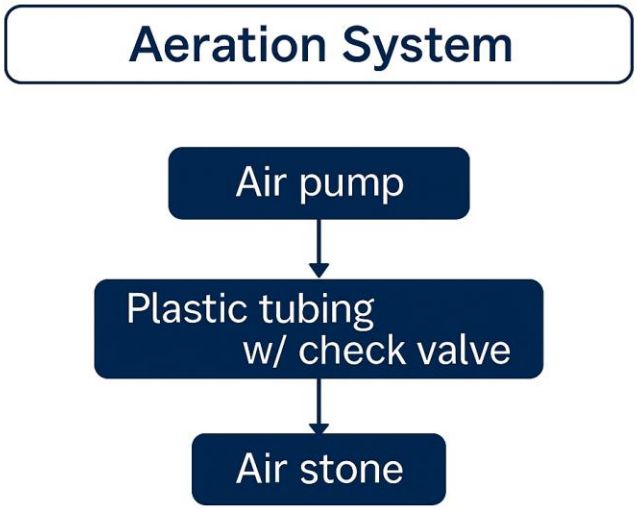

Figure 10. Flow Chart of the Aeration System (Provided by ChatGPT)

There are three main components that provide the dissolved oxygen (DO) your plants need to survive. First, there's the air pump, which pulls in oxygen from the atmosphere. One important design choice we made was to use an air pump with a control valve, allowing us to adjust how much air is pulled into the system. The air is then moved through plastic tubing, which connects to a check valve. The check valve is important because it prevents water from flowing backward into the air pump, which could damage it. From the check valve, the tubing continues to the air stone, which releases fine bubbles into the water. These bubbles dissolve and increase the amount of oxygen available to the plant roots.

A key design consideration for the aeration system is checking how much oxygen the air stone can deliver for the volume of water in the system. In our case, one air stone didn't reach the needed level of supersaturation. On top of that, we had nine plants in the system, so we knew we needed a lot of dissolved oxygen. That's why we used two air stones—this was important because it's always better to overshoot than fall short. In most DWC designs, giving more oxygen than needed doesn't harm the plants. You can think of it like a faucet slowly leaking even after reaching the supersaturation point. Is it very efficient? In other words, does it save water? Not really—but as long as the faucet doesn't overflow completely, a few extra drops won't hurt the system. With this in mind, we decided it was safe to fine-tune the oxygen levels using a

control valve. By carefully watching the plants' growth rates, we found the best valve setting to help the plants grow as fast and healthy as possible. This is also a design consideration for simplicity's sake, which is our main objective.

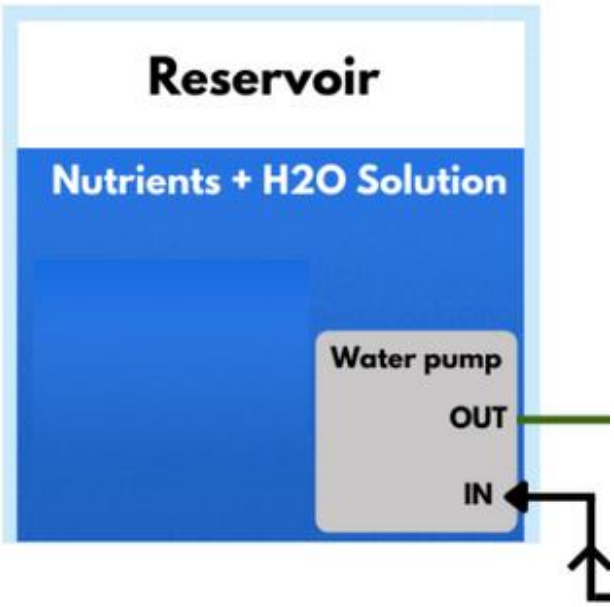

Figure 11. Reservoir is for keeping Oxygen and Nutrients inside the system (provided by ARTISUN Technology)

Reservoir

While the aeration system's main purpose is to provide oxygen, the reservoir's main job is to help keep that oxygen and nutrients inside the system as shown in figure 11. There are several factors that can prevent you from maintaining proper oxygen levels, such as contamination from algae growth or excessive micro-organism, and pH and EC (electrical conductivity) imbalances. However, there are design methods you can use to prevent these issues from happening.

Preventing contamination:

Algae and harmful microorganisms is especially important to consider because, like your plants, these unwanted organisms also consume dissolved oxygen (DO). When they multiply, they create a competitive environment in your DWC system, which can eventually lead to system failure. If left unchecked, these harmful substances can reproduce extremely fast when the conditions are right causing your plants to suffer or even die.

That’s why it’s important to understand the conditions that allow these harmful organisms to thrive. They grow best in warm temperatures, stagnant water, low oxygen levels, excess nutrients, and areas exposed to light. By designing your system to avoid these conditions, you can keep your reservoir clean, your oxygen levels stable, and your plants healthy.



Figure 12. Black Tote for total reflection

The reservoir we used was a sterile black latching stacker tote as shown in figure 12, chosen for its thick walls, which help block out light and reduce the risk of algae growth. Its strong plastic structure supports the mesh pots in the lid and holds a good amount of nutrient-rich water. For extra protection, the walls can be painted with black paint to make sure all light is reflected, and none reaches the water inside.

Preventing Imbalances:

Imbalances in pH and EC are caused by the way plants take in nutrients and release waste at different rates. The waste they release is in the form of ionized salts, which increases the electrical conductivity (EC) of the system—this is why it's important to measure EC regularly. pH levels change based on the acidity in the system, often caused by nutrient solution sitting in one place for too long. This can happen when a plant doesn't absorb nutrients, absorbs too much, or when parts of the system (like dead spots) allow the solution to build up. In short, it's important to watch your pH and EC levels because these imbalances can slow plant growth and also encourage algae to grow.

The best way to prevent this is by doing regular nutrient solution changes every one to two weeks. This helps reset the system, avoids unexpected imbalances, and keeps the environment healthy for the plants. It also builds the habit of checking for harmful changes early. Even in a well-designed system, problems can

still happen. For example, fungi can start growing inside the air tubing. This is one of the few downsides of having a simple system. However, draining the reservoir and wiping down the sides of the tub is still easier than pulling weeds in a traditional garden.

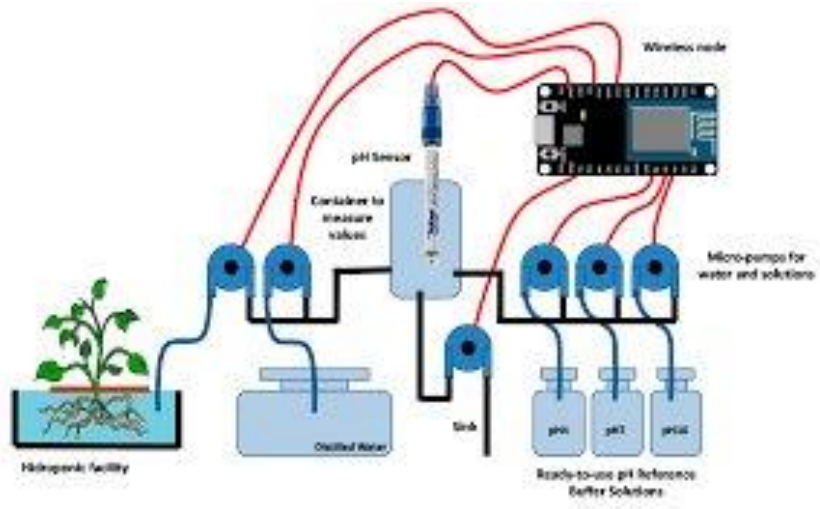

Figure 13. Automated Cleaning System (Provided by Research Gate)

While this system can be automated, we chose to keep it simple, informative, and affordable. That goal is what makes it great for classrooms or beginners. But if you ever want to expand the system later, keeping automation in mind wouldn't be a bad idea as shown in figure 13.

The only other consideration to keep in mind for the reservoir system is understanding the difference between changing the nutrient solution and doing a deep clean between grow cycles. As explained earlier, changing the solution means draining the water from the tub and wiping down the sides to remove any leftover nutrients or microorganisms. A deep clean, on the other hand, happens after a full plant cycle—from seed to harvest. This is when you replace your growing medium, since it can break down over time or become contaminated with harmful substances. It's important to note that the Rockwool cubes we use are not reusable, unlike some other types of growing media. That’s one of the trade-offs of using Rockwool—it’s easy to maintain and works well for early growth, but it's designed for single use.

Light System

Lighting is an essential factor for photosynthesis, as it provides the energy for the plant to grow and eventually produces offspring. There are specific types of grow lights with different colors, like blue light, which supports vegetative growth, and red light, which encourages flowering and fruiting. Using a combination of both helps mimic natural sunlight and supports the plant through its full life cycle. To provide a consistent and full-spectrum light source, Barrina LED grow lights were implemented, offering

balanced wavelengths suitable for both vegetative and early flowering stages. These lights were mounted on a height-adjustable rack made from wood, allowing precise control of light intensity as the plants matured. An additional enhancement included the automation of the lighting system using a Kasa smart plug, enabling programmable cycles to simulate natural day-night rhythms and minimizing the potential for human error in daily operations.

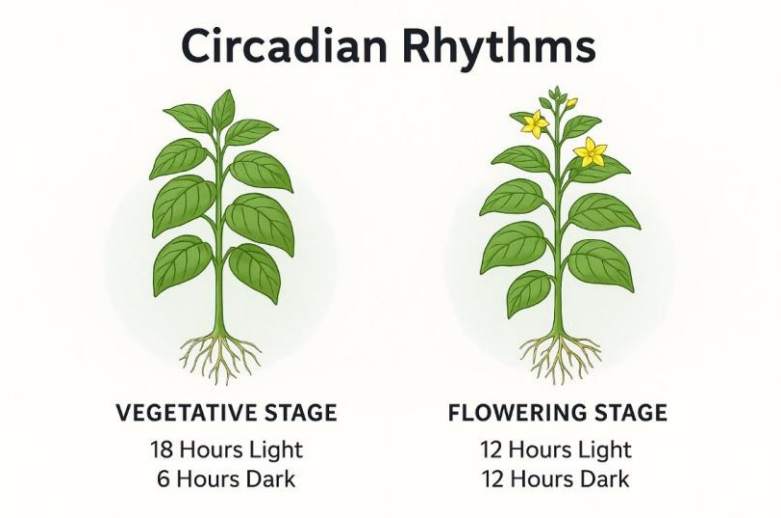

Figure 14. Circadian Rhythms Balances Plants Workload (Generated by Chat GPT)

The reason having a programmable cycle is important when using a light system is because it helps prevent the light from overworking and overheating. As shown in figure 14, Circadian rhythms are important to keep in mind because they help manage the plant's workload during different stages of growth. For example, during the vegetative stage, plants require less energy, so you can extend the daylight cycle. However, during the flowering stage, plants use more energy, so it's important to reduce the light exposure to give them rest. Maintaining a good balance helps prevent the plant from overexerting itself throughout all stages of development.

Plant Design Considerations

For this hydroponic project, basil (Ocimum basilicum) was selected as the model plant. This choice was based on several significant factors. Firstly, basil is a resilient and adaptable species capable of thriving under various indoor conditions, making it suitable for exploration and residential hydroponic systems. Secondly, its relatively rapid growth cycle allows for timely assessments of system performance, which can facilitate the early detection of design flaws or deficiencies in nutrient delivery. Furthermore, basil enjoys considerable popularity as a culinary herb, enhancing its appeal and practical utility for home growers.

In the construction of the hydroponic system, we prioritized design specifications that balanced cost, functionality, and ease of replication. The goal was to create a setup using readily available materials and minimal specialized tools while still promoting optimal plant growth. The final design needed to be modular, allowing for scalability, and easy to maintain for users with limited prior experience in hydroponics.

Project Management

The execution of the hydroponics system project was guided by a structured project management approach that emphasized phase-based task distribution, clear delineation of roles, and ongoing team communication. The project timeline was approximately 16 weeks, during which the team successfully advanced through research, design, modeling, procurement, system assembly, and documentation.

Weeks 1–3 (January 20 – February 3): The initial phase involved forming the project team and establishing foundational knowledge through extensive research. Matteo compiled information from over 30 credible sources concerning hydroponic system functionality, configurations, and comparative models. Trevin provided valuable support during this phase with additional research contributions. This groundwork informed the subsequent design direction while contextualizing project constraints and requirements.

Weeks 4–7 (February 10 – March 3): The team transitioned into a collaborative design and planning phase focused on evaluating various system configurations, identifying critical components, and streamlining features. All team members actively engaged in this iterative process, contributing to feasibility discussions, problem-solving, and preliminary conceptualization. This period was essential for refining a practical and resource-efficient system design.

Weeks 8–11 (March 10 – March 31): During this phase technical development was prioritized. Trevin, Matteo, and Chris collaborated to create a 3D model of the hydroponics system using SolidWorks, converting conceptual designs into a detailed CAD representation. Simultaneously, Matteo, Tyler, and Chris compiled a comprehensive purchase order based on finalized specifications, part compatibility, and budget constraints. This parallel workflow ensured alignment between the digital model and material acquisition planning.

Weeks 12–13 (April 7 – April 14): Final procurement activities were conducted during this period. Matteo and Chris confirmed the purchase order to ensure the timely delivery of components. Concurrently, Chris initiated early plant cultivation to facilitate seamless transplanting upon system readiness.

Administrative tasks were also addressed, with Trevin coordinating documentation and assisting Tyler in drafting the preliminary report.

Weeks 14–16 (April 21 – May 5): With all components received, system assembly commenced on April 24. After assembly, Matteo and Chris sanitized the system using a Clorox solution, followed by a thorough rinse to ensure a contaminant-free environment. The system was then filled with water and supplemented with nutrients. Transplantation of pre-grown plants into rockwool was conducted, and the air pump was activated to initiate system operation on April 25. While the system transitioned to its operational phase, Tyler and Trevin concentrated on developing the project poster and finalizing the technical report.

Final Week (May 5 – May 9): In the final week before the project presentation, Matteo, Tyler, and Trevin collaborated to refine the report and presentation slides. Emphasis was placed on enhancing technical clarity, design justification, and visual coherence to ensure effective communication of project outcomes during the formal presentation. The success of the design was confirmed when the pants survived and grew roots. Overall, the basil plants grew to nearly twice their size in such a short span of time.

Throughout the semester, task ownership was based on team members' expertise and workload balance. Matteo contributed significantly to early-stage research, modeling, and procurement. Trevin played a key role in research, CAD development, and documentation. Chris contributed to modeling, material acquisition, and biological preparation. Tyler provided input during design discussions and assumed primary responsibility for technical writing and presentation preparation in later stages. This methodical and analytical approach to project management ensured that the hydroponics system was designed, assembled, and operational within the academic timeframe while maintaining a high standard of quality and meeting deliverables.

Design and Analysis

In building our Deep Water Culture (DWC) system, we made sure each part worked well both by itself and as part of the whole system. For example, we chose to use an external air pump instead of one that sits in the water as shown in figure 15. This decision was based on the fact that pumps placed inside the water can heat it up over time. Warmer water can make it harder for plants to absorb oxygen and may cause unwanted bacteria or algae to grow. The external pump, combined with two air stones, helped us keep the water cooler and well-aerated, which is better for the roots.

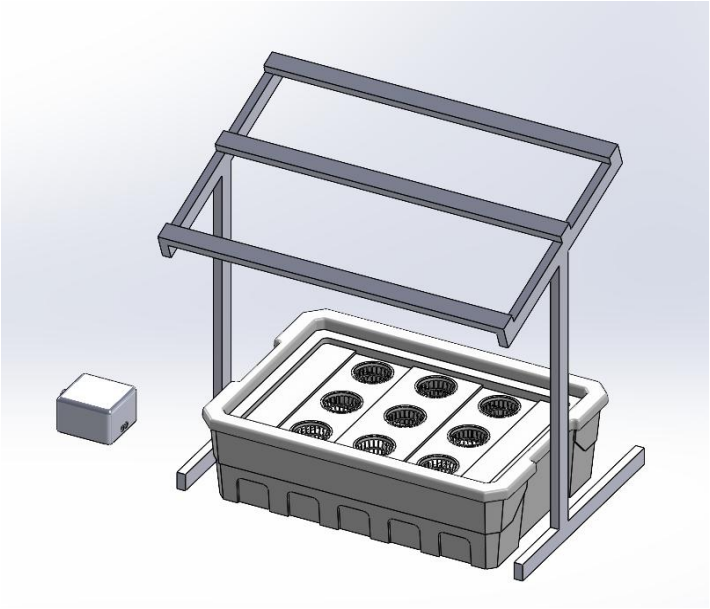

Figure 15. SolidWorks DWC Design Model

The reservoir was built to be sturdy and easy to use. The lid was strong enough to hold the weight of the mesh pots and plants without bending or sagging. We carefully drilled nine holes to hold the 3-inch mesh pots, which fit tightly so light doesn't leak in—this helps prevent algae from growing in the water. The lighting system was connected to a smart plug, so we could set a daily on/off schedule. This regular light cycle helps plants grow better by giving them a steady day/night rhythm, similar to natural sunlight.

We made the system using materials that were low-cost and easy to find, like basic wood, plastic tubs, and common hardware. Even though we focused on keeping it affordable, the system still turned out strong, dependable, and simple to maintain. The goal was to make something that works well for classrooms, beginners, or small spaces, without needing expensive tools or high-tech equipment.

Assembly Process Evaluation

Building the system was simple and didn't require many tools. We drilled the lid to fit the mesh pots, then connected the air pump with air hoses and suction cups. The air stones were placed at the bottom of the reservoir, and we tested the system to make sure air was flowing correctly. Before adding plants, we cleaned the reservoir with a Clorox and water mix, then rinsed it and filled it with water and a hydroponic nutrient solution. We placed pre-grown seedlings into Rockwool cubes, then into the mesh pots. After setting up the light frame above the reservoir, we turned on the pump and monitored the setup to make sure everything was working as expected.

Cost and Performance Evaluation

The full cost of building the system was $260.32. This included the reservoir, air pump, tubing, mesh pots, air stones, lighting, smart plug, nutrients, growing medium, and cleaning supplies. Assembly took around 2 to 5 hours with a small team. While we didn't include the cost of the starter plants, we recognize that some parts could be adjusted to save money in the future—like using less Rockwool or replacing the smart plug with a manual timer. Overall, the design is simple enough to turn into a DIY kit that anyone could put together at home or in a classroom.

Testing and Further Evaluation – Observing Plant Behavior

During the first week after moving the plants into the system, we noticed signs of transplant shock—a common reaction when plants are introduced to a new growing setup. The leaves dropped, the plants looked weak, and some even lost their stiffness. While this looked concerning at first (see the example in Figure 15), our research confirmed this was normal and temporary. The plants were simply adjusting to their new environment in the hydroponic system.



Fig. 16 Physiological Stress

By day 10 or 11, the plants began to bounce back. Around day 15, their growth noticeably increased. Over the next few days, they nearly doubled in size, growing faster than the same plants grown in soil. The leaves were bigger, more colorful, and fuller. This fast recovery happened because the roots in the DWC system had constant access to oxygen and nutrients, unlike in soil where conditions vary more.

We also observed differences in texture and flavor. The hydroponic basil grew larger and softer leaves, compared to the thicker, rougher leaves of the soil-grown basil. That's because outdoor soil plants deal with wind, sun, and changing moisture levels. In contrast, our indoor hydroponic setup kept things consistent, so the plants didn't need to toughen up.

In terms of flavor, the basil grown in water was sharper, more aromatic, and had a fresher taste. This matches what experts say: when plants get the right amount of nutrients and light in a stable environment, they often produce more flavor and beneficial plant compounds. Based on these results, the hydroponic system not only helped plants grow faster, but also made them taste better, which is useful for both home growers and chefs.

Water use was another important result. Over three weeks, the system only lost about one cup of water, which is extremely efficient. Because the water stays sealed inside the system and isn't absorbed by soil or lost to evaporation, the design kept everything running smoothly with very little maintenance.

Finally, the system itself held up very well. No parts broke, no leaks formed, and the reservoir stayed clean and clear. This is thanks to our early cleaning steps using diluted bleach and to the design that blocks out light, which prevents algae from growing. Since the water stayed clean, we didn't need to drain or replace it during the whole test.

Conclusion

The design and implementation of our Deep Water Culture (DWC) hydroponics system successfully achieved the main goals of this project: creating an affordable, easy-to-use, and beginner-friendly setup for growing plants without soil. Using basic materials and simple tools, we were able to build a system that maintained ideal growing conditions for basil—a fast-growing and commonly used herb. Our approach focused not just on assembling hardware, but on understanding and responding to plant behavior in a soilless environment.

Testing showed clear results. After a short adjustment period, the plants quickly recovered from transplant shock, then grew rapidly and developed fuller, softer leaves compared to soil-grown plants. They also produced a stronger flavor and more vibrant color. These improvements were supported by the system's consistent delivery of oxygen and nutrients, minimal water loss, and protection from outside stressors like

heat and light fluctuations. The sealed reservoir and non-submersible air pump helped keep the water clean and cool, while the programmable LED lights provided the right amount of light at each stage of growth. One of the key strengths of this design was its reliability and low maintenance. The system ran smoothly throughout the testing period without leaks, contamination, or equipment failures. At the same time, it stayed simple and cost-effective, with the full build coming in under $300. While there are still ways to reduce cost or add optional automation, this first version already shows strong potential as a practical solution for classrooms, home growers, and small urban gardens.

Ultimately, this project showed that with the right design and understanding of plant needs, hydroponics can be a powerful and sustainable alternative to traditional soil gardening. Our DWC system demonstrated how new growers can successfully cultivate healthy plants using a system that is efficient, educational, and adaptable. Moving forward, future versions could explore new crops, expand in size, or include features like filtration or automated sensors—helping to make hydroponics even more accessible to a wider range of users.

References/Sources

YouTube Video. *DWC Hydroponics: Beginner's Guide Step-by-Step Tutorial.* YouTube, uploaded by Alex Ruzicka, 3 Mar. 2021, https://youtu.be/j88iNWitUmc.

Green Drip Grow. "How to Set Up a Deep Water Culture System for Hydroponics." *Green Drip Grow*, https://greendripgrow.com/how-to-set-up-a-deep-water-culture-system-for-hydroponics/. Accessed 9 May 2025.

Easy Home Hydroponics, "Troubleshooting Deep Water Culture (DWC) Aeration Issues." *Easy Home Hydroponics*, https://easyhomehydroponics.com/hydroponic-troubleshooting/troubleshooting-deep-water-culture-dwc-aeration-issues/. Accessed 9 May 2025.

Virginia Cooperative Extension (VT), Ciampitti, Ignacio A., et al. "Hydroponics: Growing Plants Without Soil." *Virginia Cooperative Extension*, Publication SPES-464, Mar. 2021, https://www.pubs.ext.vt.edu/content/dam/pubs_ext_vt_edu/spes/spes-464/SPES-464.pdf. Accessed 9 May 2025.

Instructables – Indoor DWC System, "My Indoor DWC Hydroponics System." *Instructables*, https://www.instructables.com/My-Indoor-DWC-Hydroponics-System/. Accessed 9 May 2025.

Instructables – Hydroponics for Beginners, "Hydroponics – at Home and for Beginners." *Instructables*, https://www.instructables.com/Hydroponics---at-Home-and-for-Beginners/. Accessed 9 May 2025.

Hydroponics Planet, "How to Build a Deep Water Culture System." *The Hydroponics Planet*, https://thehydroponicsplanet.com/how-to-build-a-deep-water-culture-system/. Accessed 9 May 2025.

NIU Communiversity Garden, "Hydroponics." *Communiversity Gardens – Northern Illinois University*, https://www.niu.edu/communiversitygardens/_pdf/projects/Hydroponics.pdf. Accessed 9 May 2025.

K-State's Honor Pledge

On my honor, as a student, I have neither given nor received unauthorized aid on this academic work.

_____ _____

Student/Team Signature Date